Search

- Home
- Single
  - ZDZ 90RV-J
- Twin
  - ZDZ 112B2RV-J Champion
  - ZDZ 113R2-J INLINE
  - ZDZ 180B2RV-G Champion
  - ZDZ 180B2RV-J Champion
  - ZDZ 210B2-J
  - ZDZ 210B2RV-J
  - ZDZ 210B2RV-JS
  - ZDZ 210R2-JS INLINE
  - ZDZ 250B2-J
  - ZDZ 250B2RV-J
  - ZDZ 250R2-JS INLINE
  - ZDZ 250B2-J PPG
  - ZDZ 500B2-DS
  - ZDZ 195B2RV-J Champion
- Quad
  - ZDZ 224B4-J
  - ZDZ 360B4-J
  - ZDZ 420B4-J
  - ZDZ 420B4-JS
  - ZDZ 420B4-JSR
  - ZDZ 500B4-J
  - ZDZ 420R4-JSR inline
- Accessories
- JMB Exhausts
  - Mufflers 3-chamber Type "M"
  - Mufflers 4-chamber Type "L"
  - Pots mufflers
  - Bolt on silencers
  - Teflon couplers
  - Steel clamps
  - Installation
- Gallery
- Downloads
  - General
- Contacts
  - Distributors
  - Support
- E-shop
- Videos
  - Maintenance
  - Pilot videos
  - Engine's tests
  - Others
- ZDZ club

ZDZ ENGINES

eal power for your model airplane, PPG, Ulli and many more applications

ZDZ ENGINES

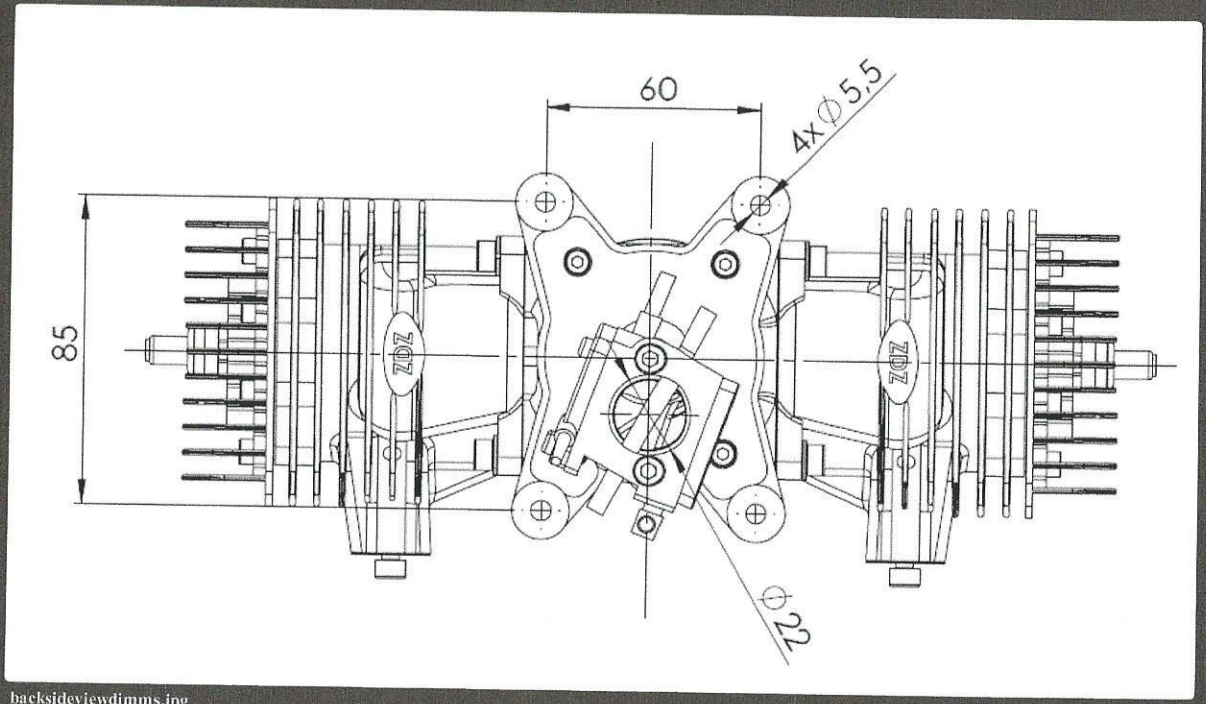

backsideviewdimms.jpg